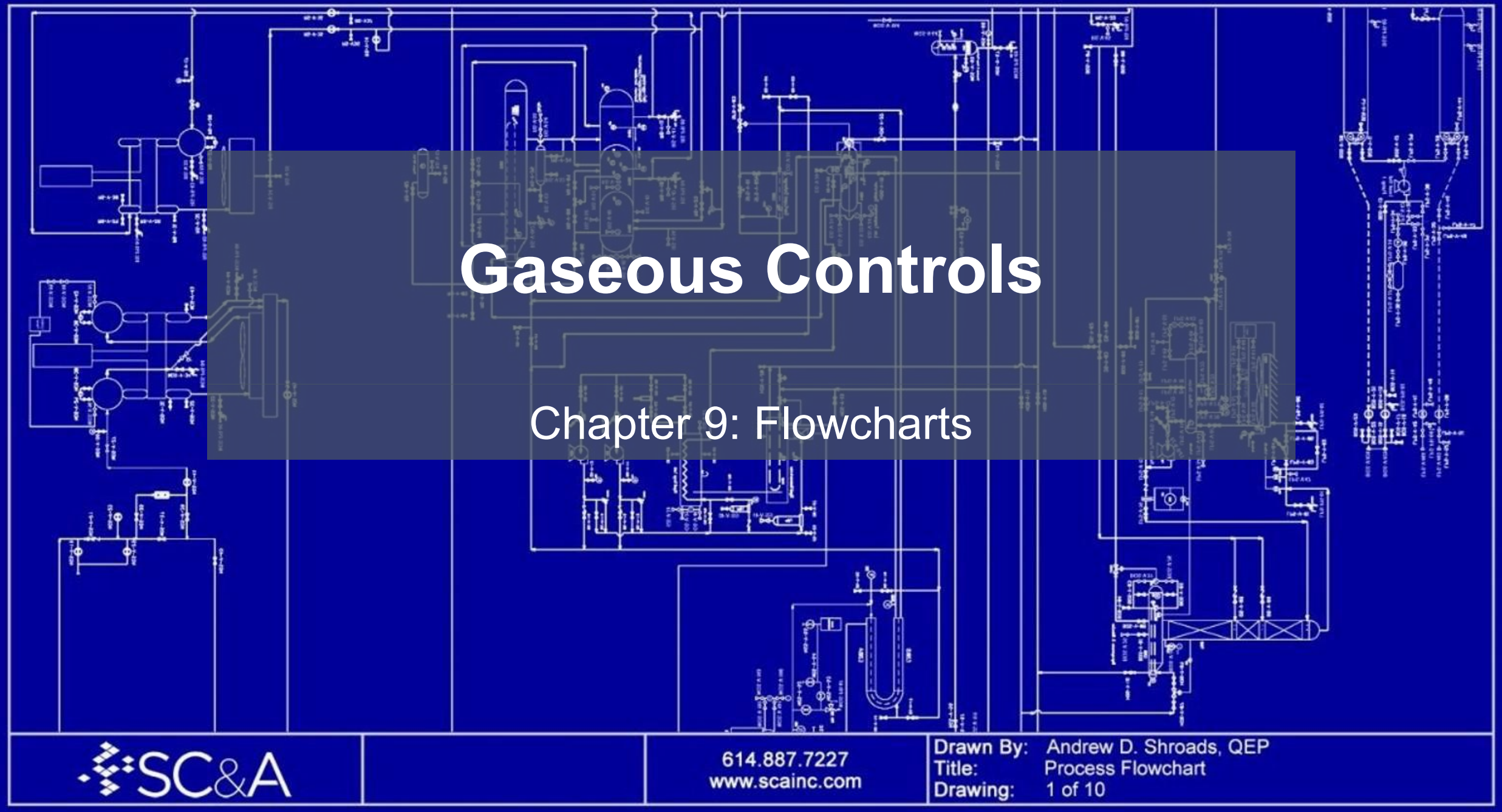

Gaseous Controls

Chapter 9: Flowcharts

SC&A

614.887.7227
www.scainc.com

Drawn By: Andrew D. Shroads, QEP
Title: Process Flowchart
Drawing: 1 of 10

Chapter 9: Flowcharts
Objective

In this chapter, we will discuss:

- What are flowcharts (simple process flow diagrams)?
- What are flowcharts used for?
- How do you read a flowchart?

Chapter 9: Flowcharts
Overview

Flowchart Purpose & Uses

- Useful tool for evaluating and designing a complex system
- Communicate the following:
  - Equipment configuration
  - Material pathways
  - Location and type of monitors
  - Points of emissions generation

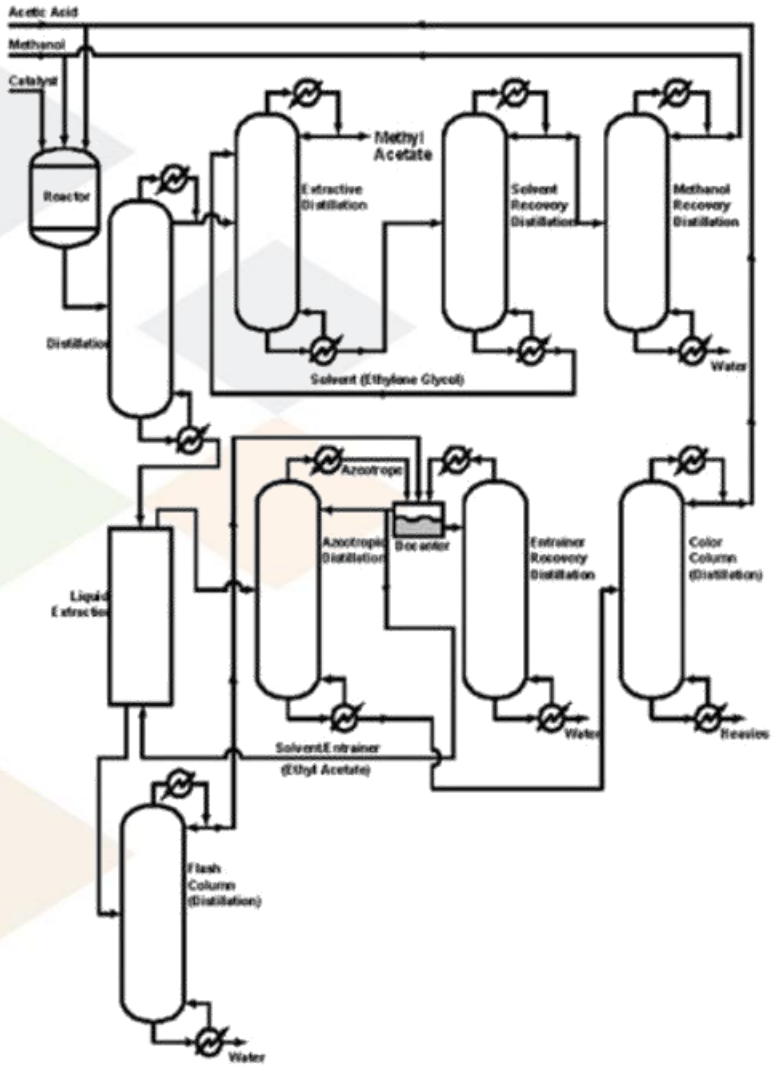

Material Pathways / Streams

- Shows how a material travels through a system
  - Shows material addition points (e.g., raw or recycled materials)
  - Show material extraction points (e.g., baghouse dust)
- Character inside gas stream identifies duct
- Diamond with character identifies other streams

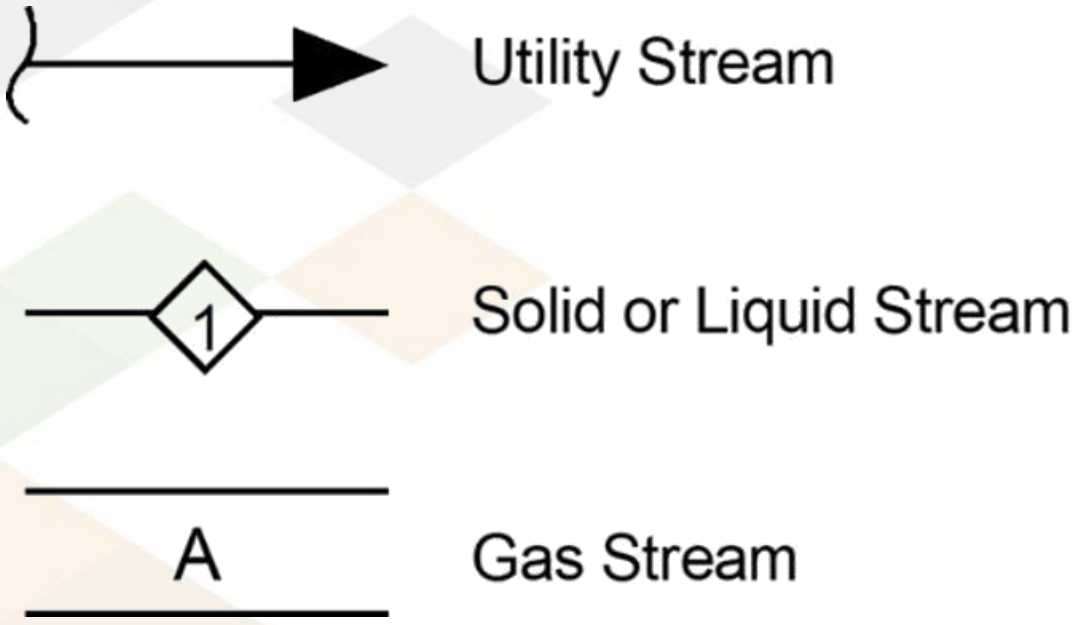

Material Pathways / Streams

- Utility streams are represented by a black arrow with an abbreviation
- Utility stream may be generated by plant (e.g., compressed air) or provided by outside supplier (e.g., city water)

Code	Material Stream
Cal	Compressed calibration gas
CD	Condensate
CW	City (or plant) fresh water
Gas	Natural gas
Oil	No. 2 or No. 6 oil
HS	High pressure steam
LS	Low pressure steam
IA	Instrument air

Components

- Equipment necessary for control and operation
  - Fans, pumps, valves, heat exchangers, etc.

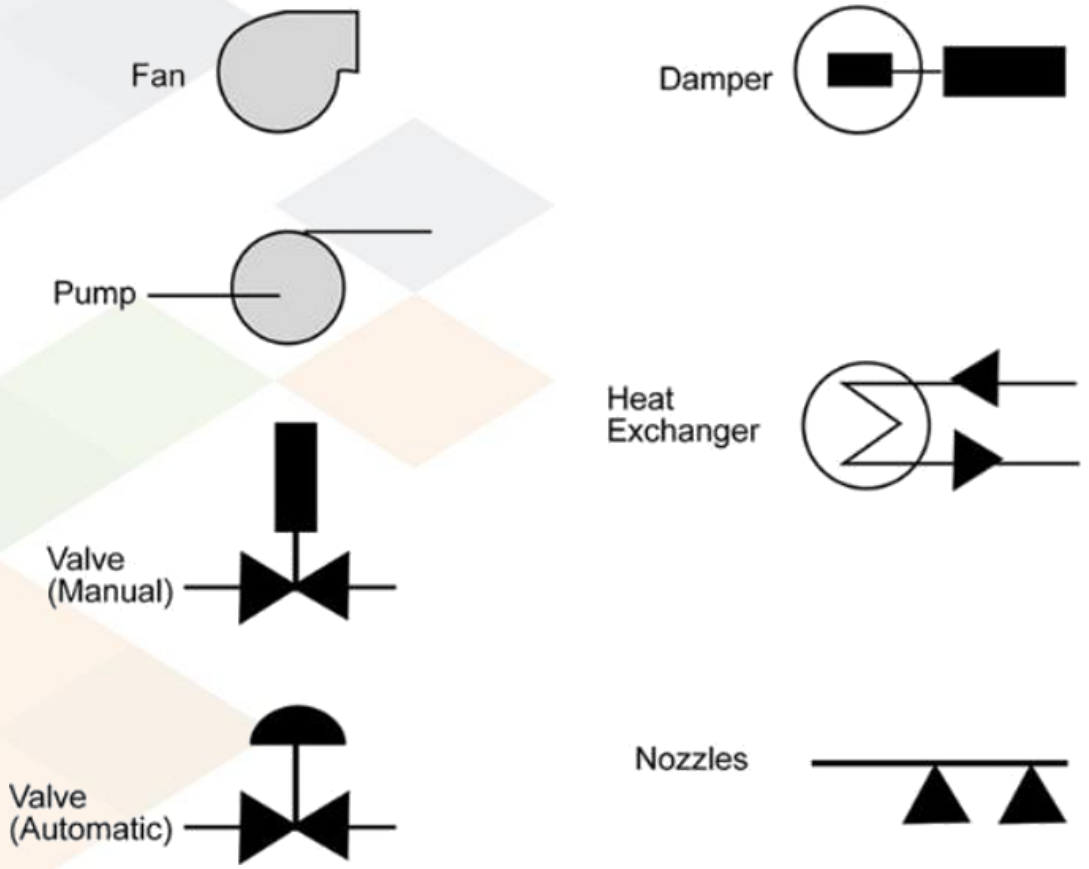

Instruments

- Monitoring equipment that may be part of operational command system
  - Includes parametric monitoring for air pollution control equipment

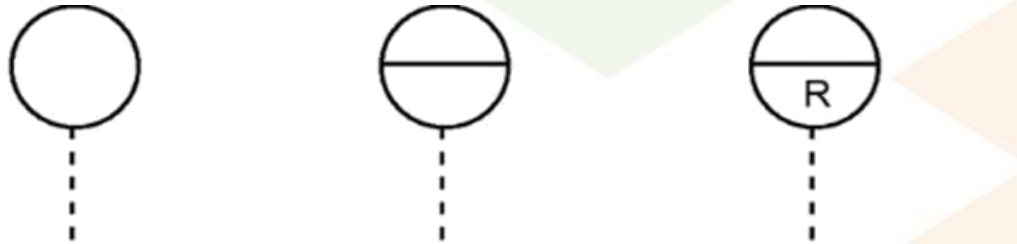

Code	Instrument
A	Motor current (amps)
CEMS	Continuous Emission Monitoring System
Den	Density
F	Flow
L	Liquid Level
LEL	Lower Explosive Limit
MP	Measurement Port
Op	Opacity
P	Gas or Liquid Pressure
PH	Liquid or slurry pH
Dp	Static Pressure Drop
SP	Gas Static Pressure
SSP	Stack Sampling Port
T	Temperature
V	Vacuum Gauge
VOC	Low concentration VOC monitor
W	Weight

Emissions Egress Points

- Area where air emissions released to environment
  - Upside triangle identifies egress point
  - Identification may or may not match permit application
  - Ensure that fugitive emissions are included in flowchart

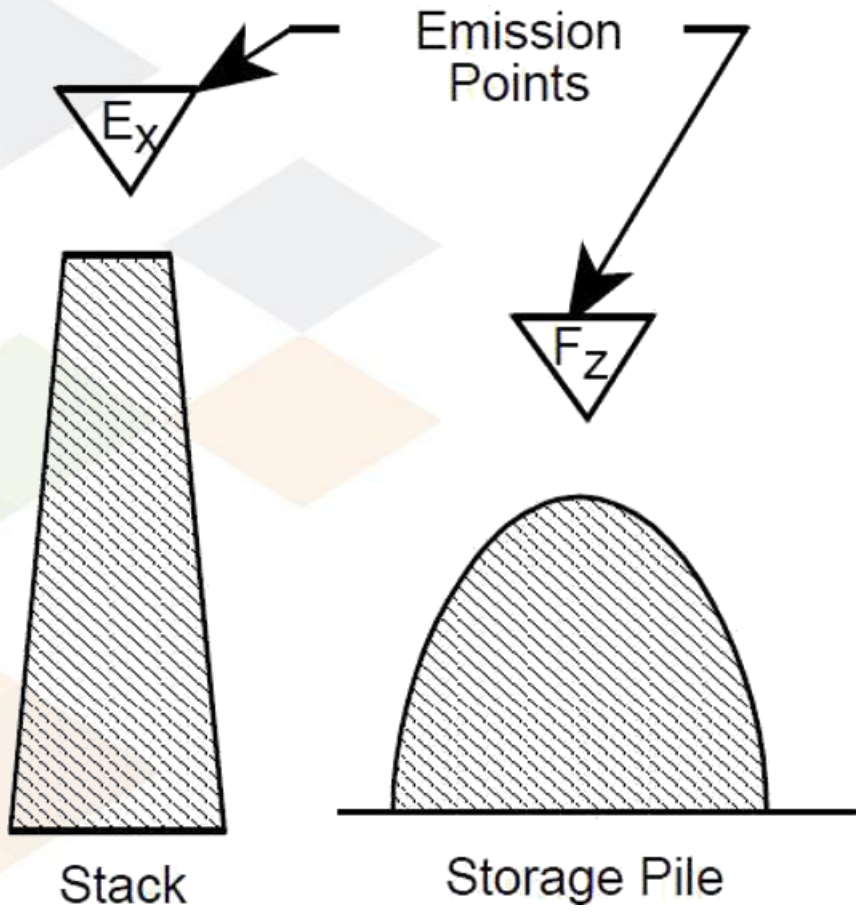

Asphalt Plant

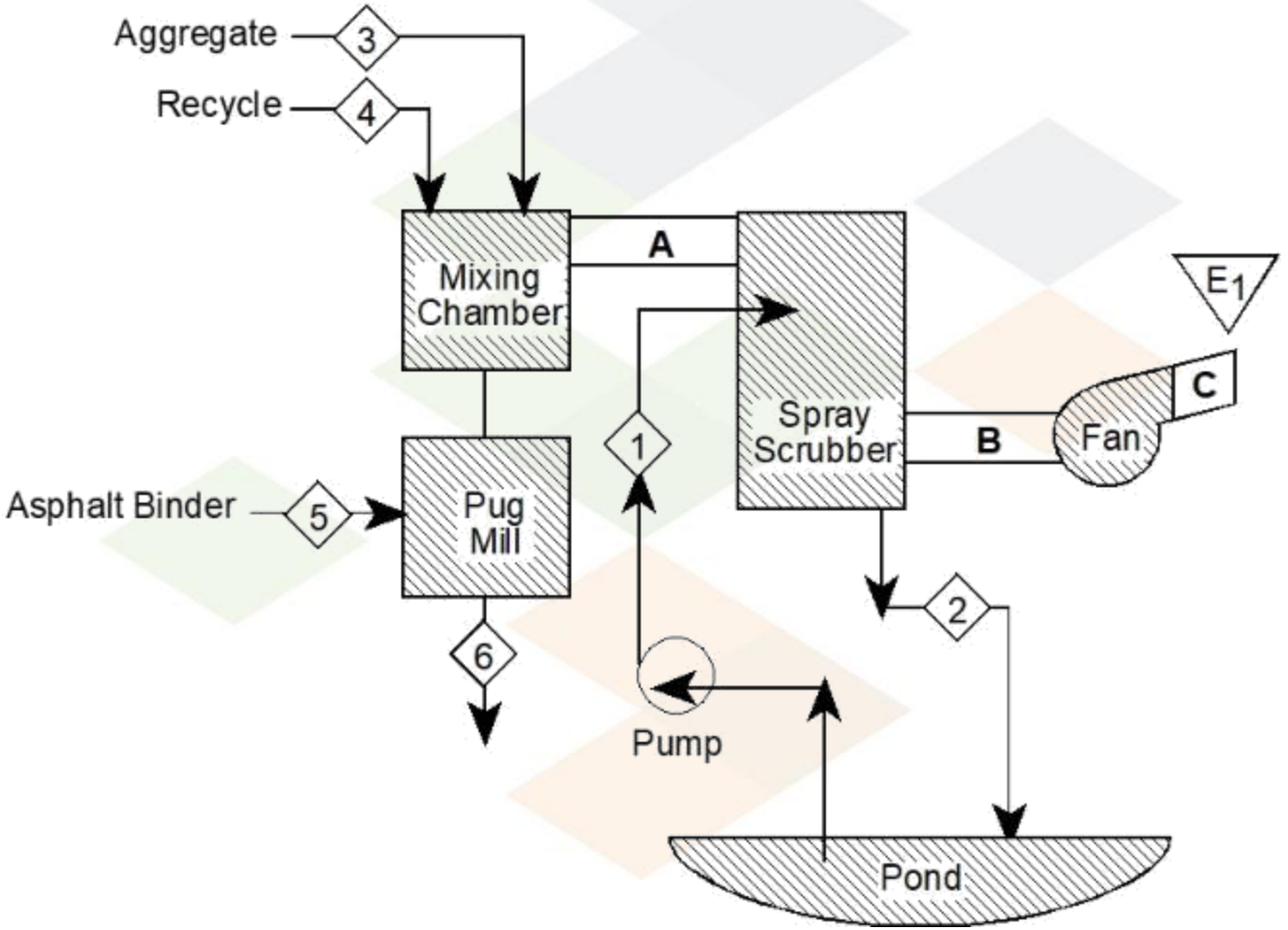

Liquid Waste Incinerator

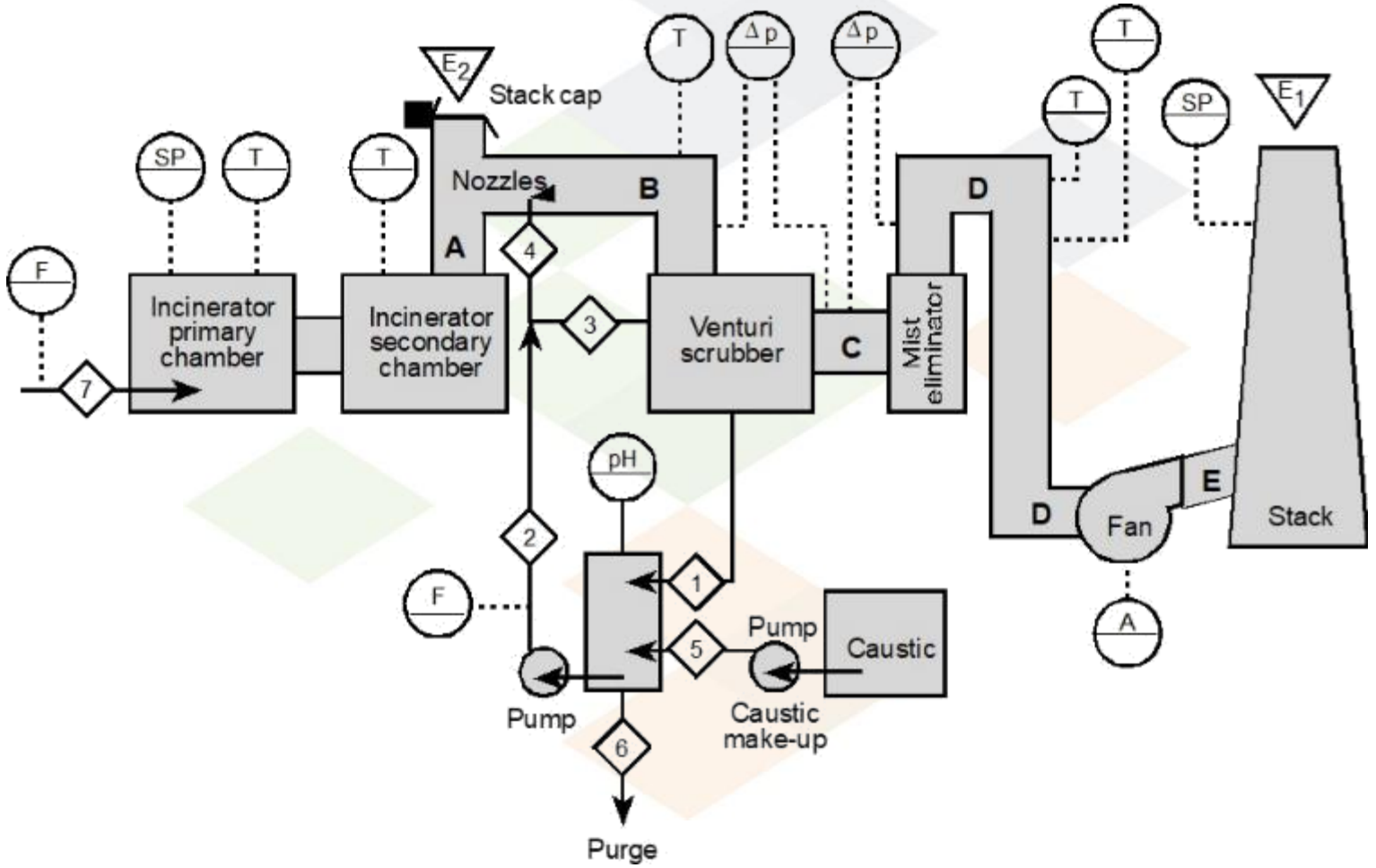

Blast Booth

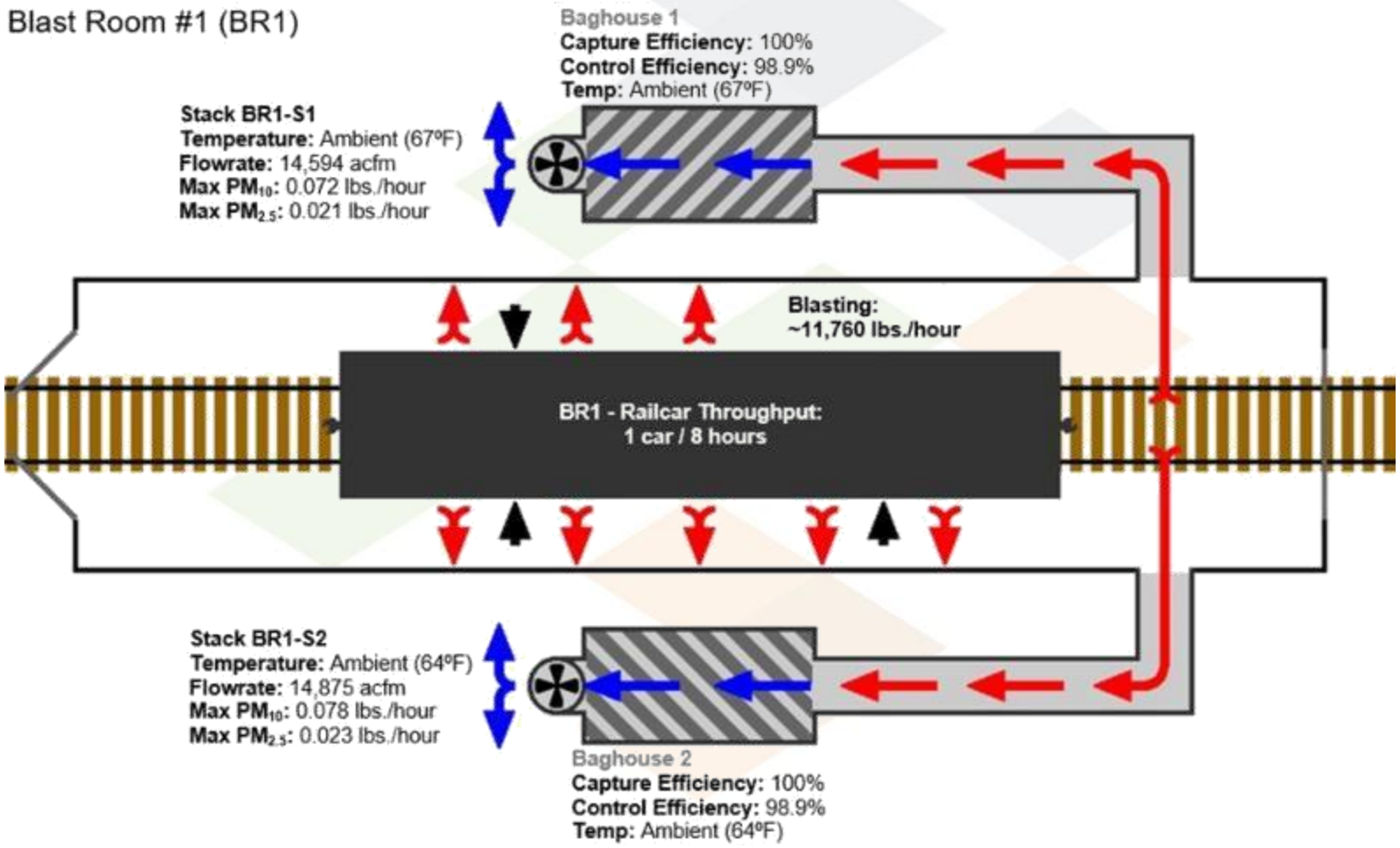
Blast Room #1 (BR1)
Baghouse 1
Capture Efficiency: 100%
Control Efficiency: 98.9%
Temp: Ambient (67ºF)
Stack BR1-S1
Temperature: Ambient (67ºF)
Flowrate: 14,594 acfm
Max PM10: 0.072 lbs./hour
Max PM2.5: 0.021 lbs./hour
Blasting:
~11,760 lbs./hour
BR1 - Railcar Throughput:
1 car / 8 hours
Stack BR1-S2
Temperature: Ambient (64ºF)
Flowrate: 14,875 acfm
Max PM10: 0.078 lbs./hour
Max PM2.5: 0.023 lbs./hour
Baghouse 2
Capture Efficiency: 100%
Control Efficiency: 98.9%
Temp: Ambient (64ºF)

Compliance Inspection

- Draft your own flowchart for organizing relevant data and information collection activities
  - Bring the diagram on the inspection and mark verified changes
- Flowcharts have varying levels of complexity and detail
  - Simple block diagram can just have air pollution control information
  - Air pollution control equipment may just be a block on a more complicated flowchart
  - Minor components may be omitted

Chapter 9: Flowcharts
Recap

In this chapter, we discussed:

- Flowchart purpose and uses
- How to read a flowchart